EMAIL Sales@Kam.com
Tel +1 713 784 0000
Fax +1 713 784 0001
www.KAM.com

Kam Controls Incorporated®
simple precision™

OWD® MASTER METER LOOP

THE KAM® OWD® OIL WATER DETECTOR

PROBLEM: Using traditional spot sampling plus lab measurement to verify performance for multiple KAM® OWD® high-water installations can be inaccurate, time consuming and difficult to manage. This method potentially requires multiple site visits for calibration and additional sampling and measurement.

SOLUTION: A calibrated KAM® OWD® Master Meter Loop enables on-site validation of OWD® performance with real-time data and increased accuracy. Portability allows users to validate multiple OWD® installations in a short period of time and on an ongoing basis. Calibration and additional validation can be accomplished in the same site visit should they be required.

A CONVENIENT AND ACCURATE WAY TO ENSURE ONGOING OWD PERFORMANCE

- OWD validation guarantees absolute accuracy in water measurement, which is particularly key in high-water situations
- A single portable OWD Master Meter Loop enables real-time validation for multiple OWD installations
- Greatly reduces site visits and man-hours associated with spot sampling
- Greater accuracy and real-time information reduce wasted hours and costs associated with produced water

OWD® MASTER METER

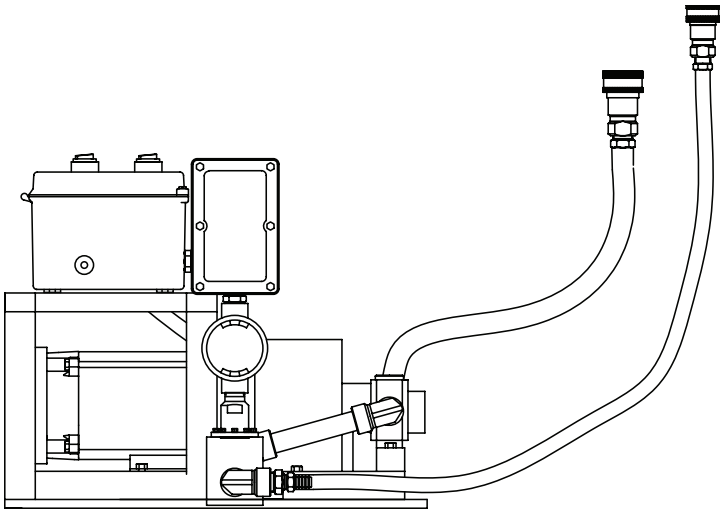

OWD® MASTER METER LOOP
THE KAM® OWD® OIL WATER DETECTOR

SAMPLING/VALIDATION PROCESS

STEP 1: INITIAL CALIBRATION

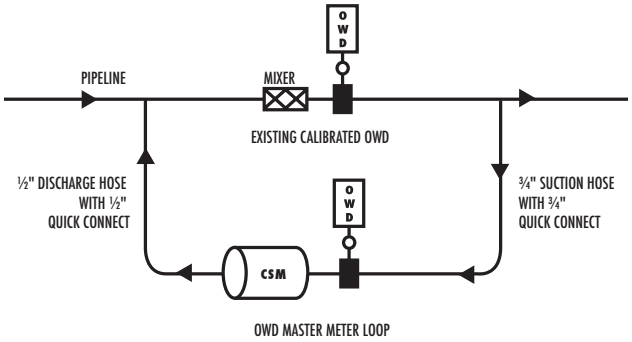

Initial calibration of the OWD Master Meter Loop is done with an existing OWD that has already been calibrated according to the OWD Manual. The OWD Master Meter Loop is connected via quick connect to the pipeline with the existing OWD. Once readings on both OWD's have stabilized, indicating a homogenous flow, readings from the Master Meter OWD can be calibrated to match the readings from the existing OWD.

STEP 2: MASTER METER

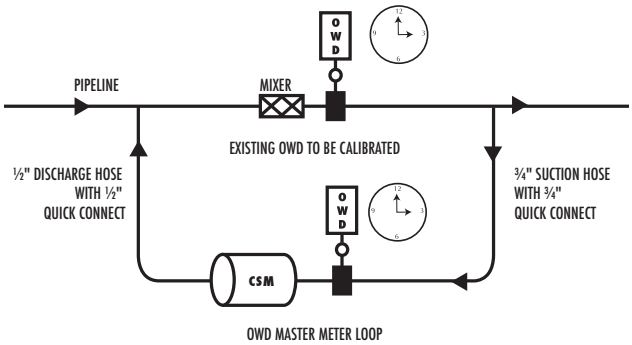

Additional OWD installations can now be calibrated using the OWD Master Meter loop. The skid is connected to the pipeline via quick connects at each location. With the CSM operating, performance for the pipeline OWD and the skid OWD can be compared over exactly the same time interval. Or OWD readings can be zeroed out on each meter, then performance compared. Discrepancies in readings can be used to calibrate the pipeline OWD.

SYSTEM ELEMENTS

KAM® OWD® OIL WATER DETECTOR
Integrated FT Flow Through Model

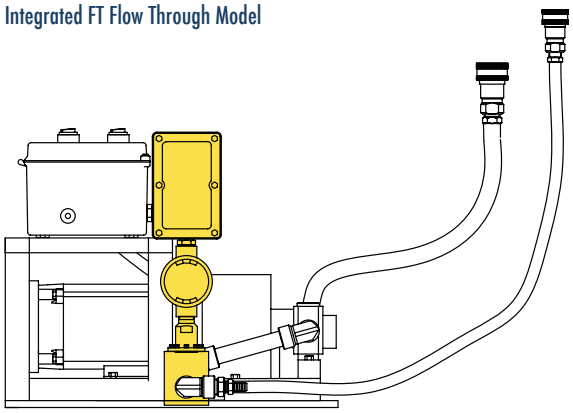

- Automatically corrects for effects of density, sulphur, and salinity
- Automatically detects transitions between oil continuous and water continuous modes and monitors both modes simultaneously
- 1% of full scale accuracy
- No salinity offset required

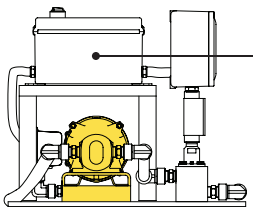

POWER CONTROL BOX

KAM® CSM™
CIRCULATING SAMPLE MIXER

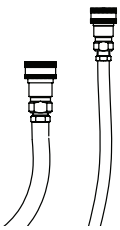

¾" SUCTION HOSE WITH ¾" QUICK CONNECT

½" DISCHARGE HOSE WITH ½" QUICK CONNECT

KAM CONTROLS, INC., reserves the right to make changes to this document without notice.

OWD® MASTER METER LOOP

THE KAM® OWD® OIL WATER DETECTOR

SITE SPECIFIC CONNECTIONS ON AN EXISTING OWD

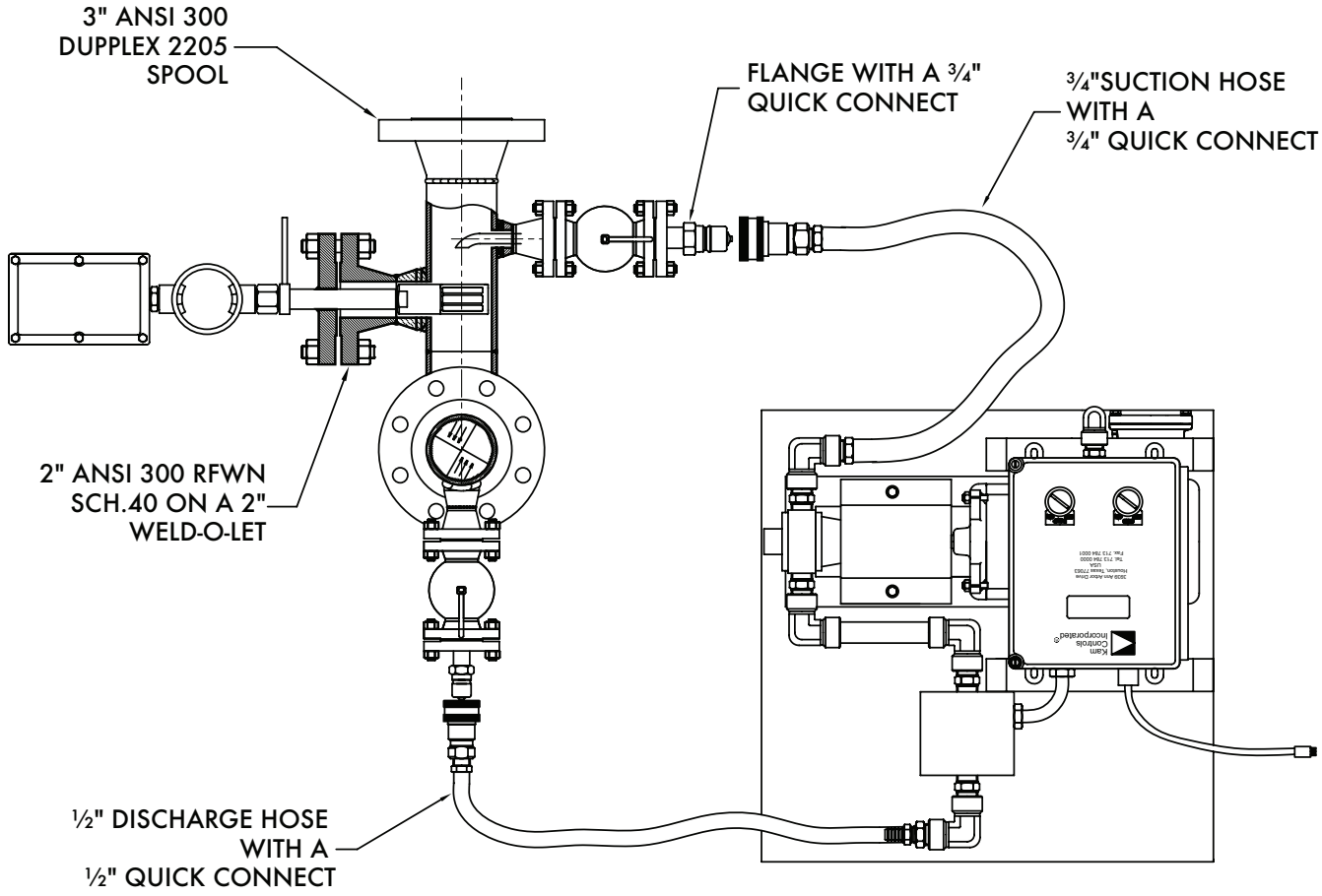

Kam Controls Incorporated®

OWD® MASTER METER LOOP

THE KAM® OWD® OIL WATER DETECTOR

SITE SPECIFIC CONNECTIONS ON AN EXISTING OWD

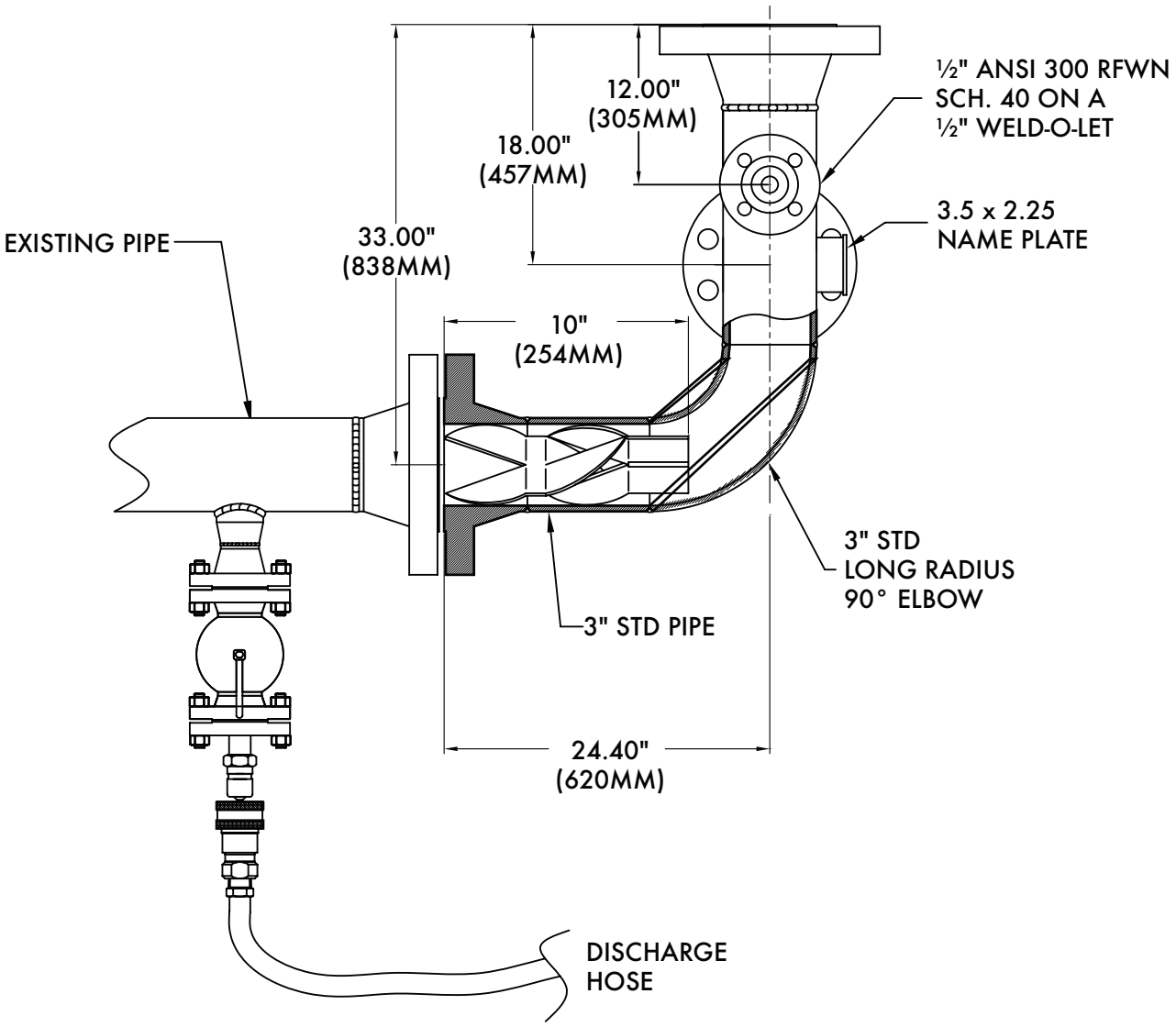

KAM CONTROLS, INC., reserves the right to make changes to this document without notice.